Electric Strike Installation Instruction

GK300 Series

Specification

Operating Voltage	12VDC, 24VDC, 12/24VDC
Voltage Tolerance	±15%
Current Draw	250mA/12VDC 150mA/24VDC
Operating Temperature	-10°C~+45°C
Humidity	0~95%
Optional Bracket	LP-025, LP-050

	Hollow Metal Frames	Wooden Frames	Bond Sensor Output	Installation
GK300	●			Mortise Mount
GK300M	●		●	Mortise Mount
GK301		●		Mortise Mount
GK301M		●	●	Mortise Mount
GK302		●		Mortise Mount
GK302M		●	●	Mortise Mount
GK310	●			Mortise Mount
GK310M	●		●	Mortise Mount
GK311		●		Mortise Mount
GK311M		●	●	Mortise Mount
GK312		●		Mortise Mount
GK312M		●	●	Mortise Mount
GK350	●	●		Surface Mount

Application Locksets

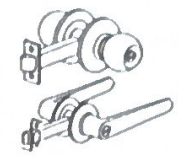

Spring latch



Latch-bolt lock

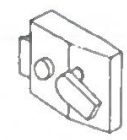

Night Latch

GK300 series electric strikes are designed for spring latch or lockset (e.g.cylindrical locks). The latch bolt lock comprises a latch bolt and a Nib. The GK300 electric strike can easily be changed between fail-safe and fail secure modes.

GK300, GK300M
GK310, GK310M

Hollow Metal Frames

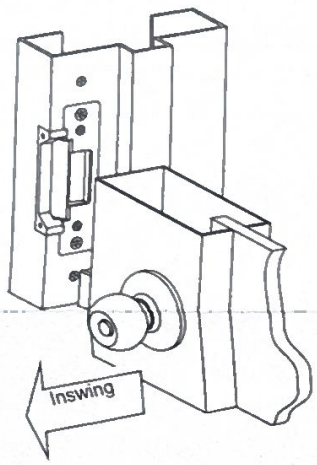

Electric Strike

GK301, GK301M
GK302, GK302M
GK312, GK312M
GK311, GK311M

Wooden Frames

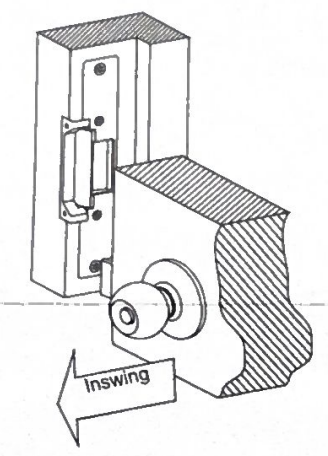

Mechanical lock set (excluded)

GK350
Hollow Metal Frames

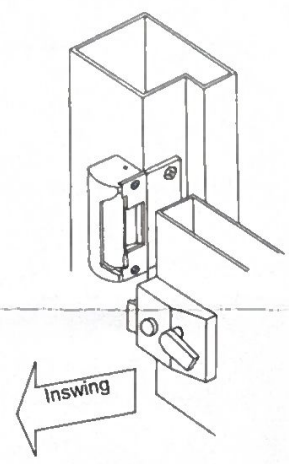

GK350
Wooden Frames

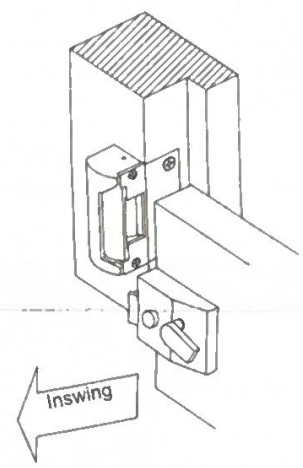

(Surface mount installation sketch GK350)

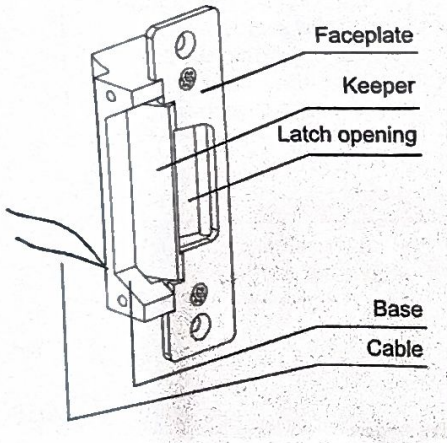

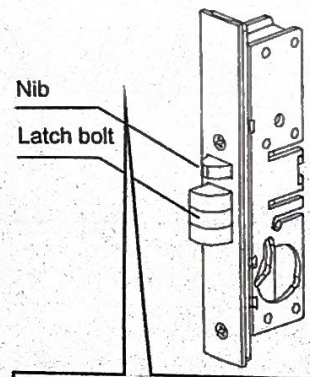

What is a Nib?
When the door is closed, the Nib makes the latch a dead bolt. The latch bolt locks into the strike keeper of the door frame to make sure that it is closed.

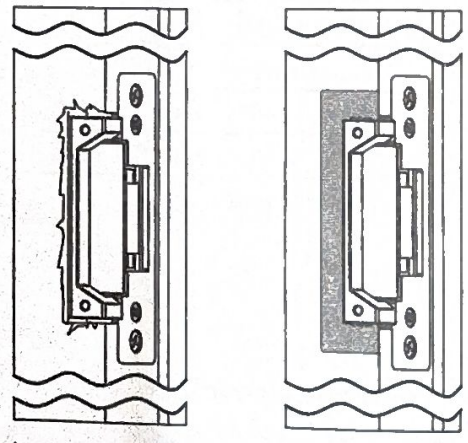

The hole cut oversized, it can use trimming plate to cover the gap to beautify the outward appearance.

Optional Brackets

Lip extension brackets for wide jamb



LP-050
50mm (L)



LP-025
25mm (L)

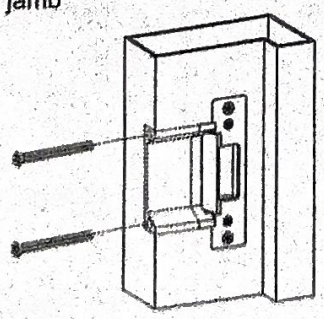

How to change Version?

Field selectable by changing position of screws

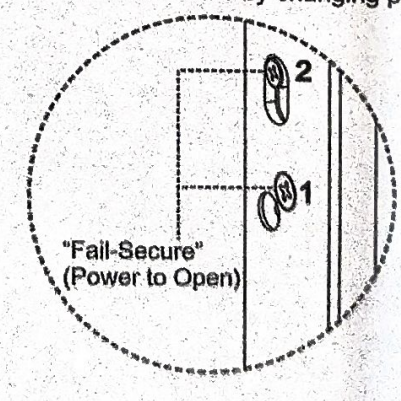

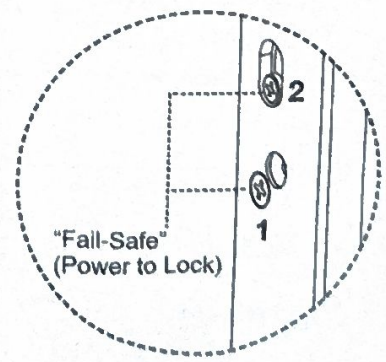

Copyright © All rights reserved.
P-MU-GK300M Publish: 2014.04.30

Installation Instruction

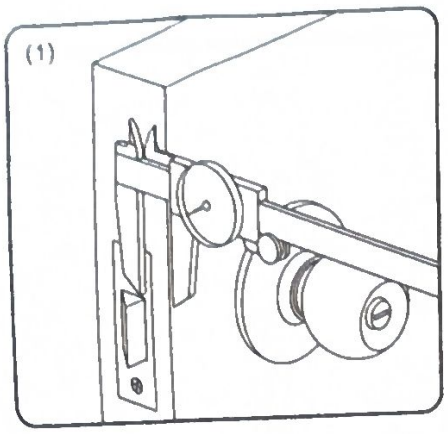

Measure the latch position

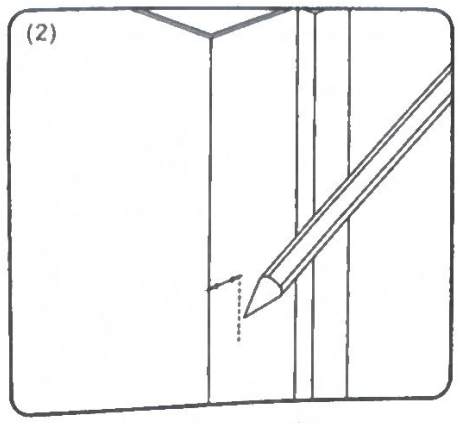

Mark the latch position

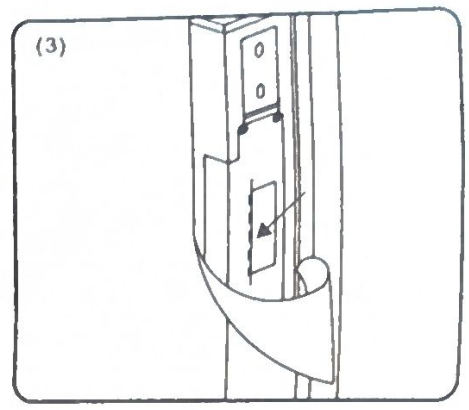

Mount the supplied installation template and align to the marked line

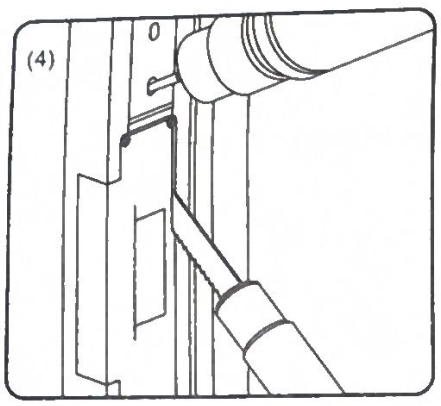

Drill and cut the hole according to the template supplied

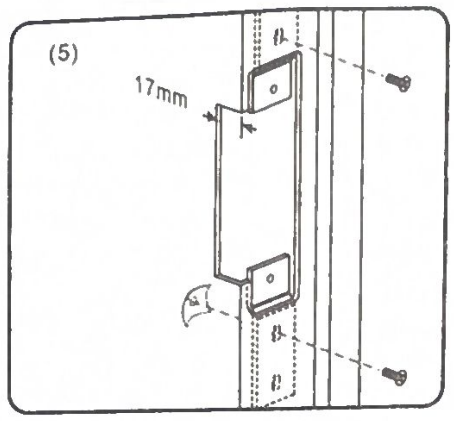

Tighten the fixing plug

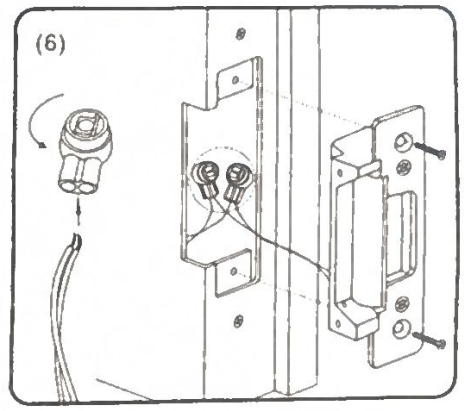

Connect the power and test the unit

Caution:
Proper gap must be reserved between the strike keeper and latch bolt to prevent failure of solenoid valve.

Connecting Diagram

Single Voltage (12 or 24VDC)

Bond Sensor Output: GK300M, GK301M, GK302M, GK310M, GK311M, GK312M
Reed Switch rated: 0.3A/6VDC

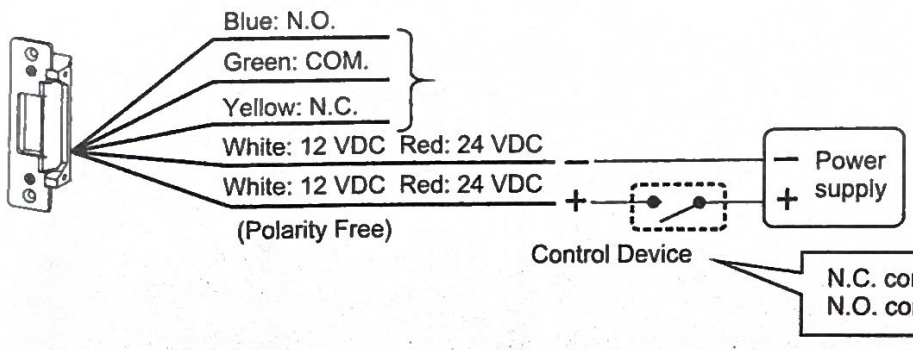

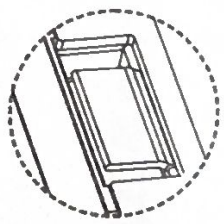

N.O. dry contact output: opened status
N.C. dry contact output: When the micro switch is pressed by latch bolt

N.C. contact or Access Relay for " Fail-safe" setting
N.O. contact or Access Relay for " Fail-secure" setting

Dual Voltage (12/24VDC)

For the 12 VDC operation, the electric strikes have to connect in parallel.

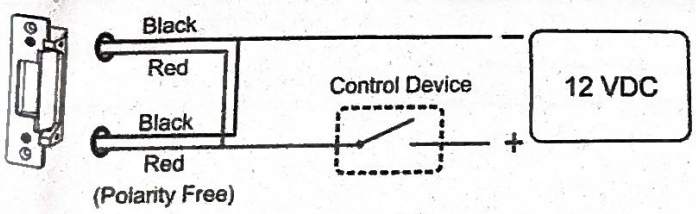

For the 24 VDC operation, the electric strikes have to connect in series.

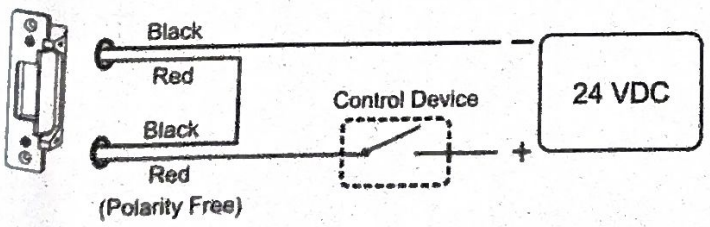

Butt Splice (IDC) Connector

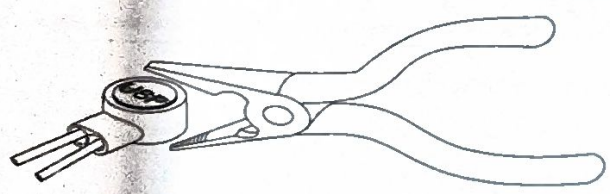

Using crimper or pliers and pressing the header of connector down to even position

Copyright © All rights reserved.
P-MU-GK300M Publish: 2014.04.30