CARLISLE BRASS

ASSA ABLOY

PRODUCT DATA SHEET



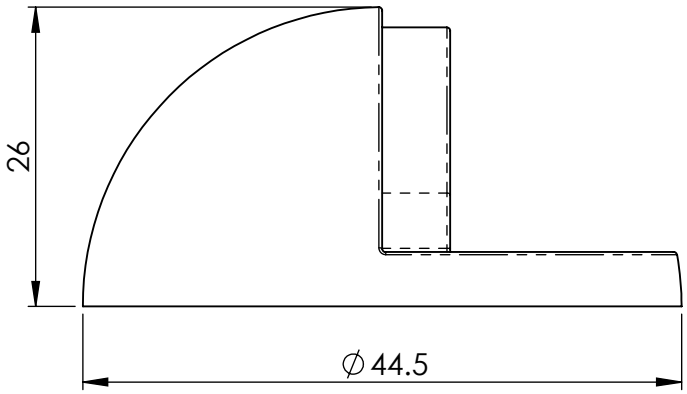

CODE:	AA20MB
DESCRIPTION:	Floor Mounted Oval Doorstop
FINISH:	Matt Black
BRAND:	Carlisle Brass
SPECIFICATION:	Made from high quality brass
	Available in multiple finishes
	Standard fixings supplied

10 YEAR